MEC 102-Reading Schematics and Symbols
Symbols on Schematics

Preface

A good maintenance specialist must be able to do many different kinds of jobs. If you are to become such a person, you must learn to do electrical jobs, mechanical jobs, piping jobs, fluid-power jobs, and many other special jobs. And you must not be limited to working on old, familiar equipment. New machines and complicated new systems will be installed in your plant, and they will also require your knowledge and skill in maintaining them.

No one can do good work on all these systems by relying only on intuition and "seat of the pants" judgement. You must be able to read and understand schematics. If you learn this skill, you will be able to understand, maintain, and repair almost any equipment in your plant—old or new. Your skill will be one of the signs that you are a true professional. It will mark you as a far more valuable employee than the average worker.

This lesson continues your introduction to schematics and symbols. It explains how to read symbols on different kinds of schematics, and how to understand the information available on a schematic.

Objectives

After studying this lesson, you should be able to…

- Identify various types of lines on schematics.
- Identify the following schematics by their symbols:
  -electrical
  -fluid-power
  -piping
- Give the purpose of legends and other tables of symbols.
- Describe a set-by-step approach to troubleshooting when using a schematic.

Key Terms

Legend _____

_____

Nominal diameter _____

_____

Common Features of Schematics

Lesson One explained that all schematics represent systems. _____ stand for each part of the system, and _____ show how they are connected. But schematic diagrams have more than this in common.

A well-prepared schematic is drawn with lines connecting the component parts in a logical _____. It begins with the power source, followed by the operating devices in sequence, and finally returns to the power source, thus completing the _____.

The systems you work with on the job are seldom arranged as clearly as on a schematic. The layout of the plant and the nature of the equipment determine where the machinery will be placed. Some machines require especially strong walls or floors. Some may require a special room. Other machines may serve several systems rather than just one. Pipes may be grouped together even though they are parts of different systems.

For these and other reasons, how a system is located in the plant often has little to do with how the system works. You need the schematic to learn what the different parts of the system are, how they are connected into the system, and in what sequence they operate.

In one sense, all systems work alike. A _____ in an electrical system is like a pipe in a fluid-power system. One conducts _____, and the other conducts

fluid. Both serve the same basic purpose. The same is true of the other parts of a system. All parts control the flow, use, and delivery of materials. And in all systems, a breakdown interrupts the flow.

Differences in Schematics

Lesson One pointed out that even the most important function of a system—the control and delivery of flow—is shown in different ways on schematic drawings. In a piping system, _____ show the flow. Electrical diagrams do not use arrows. Instead, you must read the _____ (remember that electricity flows from high voltage to lower voltage) or the _____ code indicated for the wires.

It is very important, therefore, to know the special symbols for each system you work with. Is it an electric circuit, a fluid-power system, or a piping system? When you read various schematics, the lines have different meanings and the symbols may stand for different things.

Lines. Lines on a schematic show the _____ between the devices in a system. But the meaning of certain lines depends on the kind of system the schematic shows. For example, a simple line of short dashes can have three totally different meanings. On an electrical diagram, it probably represents _____ wiring. On a fluid-power diagram, it stands for a _____ line. On a piping diagram, it means a _____ line.

Several kinds of lines may appear on a single schematic. Most schematics use only one thickness, but they may use combinations of _____ and _____ lines.

Drawing standards are set by national organizations as an aid in providing uniform drawings that all trained persons can readily understand. Standards are not law, however, and some companies prefer to use their own line symbols. These symbols are usually identified in a _____.

If a drawing carries no legend, the best way to figure out what various lines mean is to use your _____ _____, plus a _____ of symbols. However, there are other clues, as you will read in this lesson.

Symbols. The meaning of certain symbols also depends on the kind of system the schematic shows. Most piping symbols differ from fluid-power symbols, and electrical symbols differ from both.

The following figure shows three symbols that all mean the same thing in different kinds of systems.

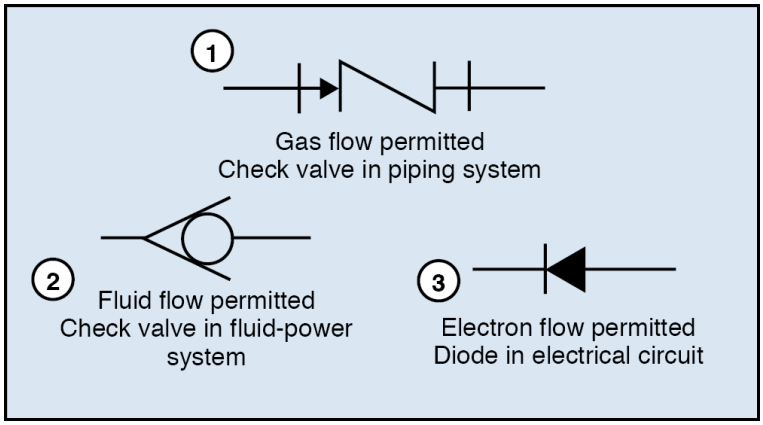

The first symbol represents a check valve in a piping system. The second is a check valve in a fluid-power system. And the third is a diode in an electric circuit. All three devices serve the same purpose, which is to:

_____

The symbols differ because the systems are different.

All three of the symbols shown above represent devices that permit flow toward the right. This direction of flow can be seen most clearly in the check valve for the fluid-power system. Pressure toward the _____ would force the ball into the seat, preventing flow.

Symbols often look like the devices they represent. If you saw the symbol below and did not already know its meaning, could you guess?

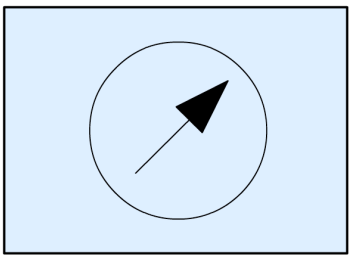

It looks like the face of a _____ with a _____ on it, which is exactly what it means.

Interpreting a combined symbol is often a matter of common sense, based on your knowledge of what other symbols mean. The figure below shows three piping symbols.

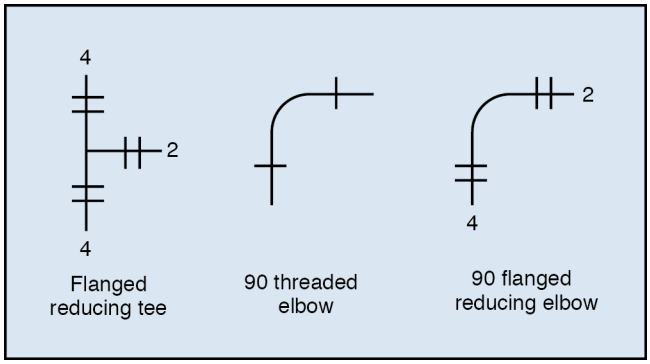

The first is a flanged reducing tee that cuts down the size of a branching pipe. The numbers indicate that the main line is _____ in. in diameter and the branch is reduced to a _____ in. diameter. The second symbol is a screwed elbow (also called a threaded elbow) that turns the pipe 90°. Elements of the first two symbols are combined to produce the third symbol—a 90° flanged reducing elbow.

Other clues. It is usually not difficult to discover what kind of system a schematic portrays. Many clues appear on the drawing.

- The drawing has a _____, which usually describes the system as electrical, fluid power, or piping.

- The drawing may have a _____, which contains information about what various lines and symbols mean. You should always read it carefully.
- There may be a list of _____ and the symbols used for them.
- Words are often a part of a drawing.
- _____ are often listed, which numbers may indicate voltages or the sizes of pipe, for example.
- Notes by the engineer or technician who prepared the drawing may make it clearer.

Schematics are so important in maintenance work that you should understand how a schematic is created. The following five elements are to be combined in an electric circuit—a battery, a switch, a generator, a motor, and some wire. The purpose of this circuit is to run the motor from the generator, with the battery as backup power.

The engineer who designs the circuit can accomplish the purpose with several different arrangements of these elements. But the engineer needs to consider more than just delivering the required voltage to the proper points in the circuit. The physical size of the circuit must be considered. The efficiency may be important. The circuit may need to be shaped to fit as part of something larger. The cost of the circuit may be the most important factor. In addition, there are building codes, electrical codes, and other factors to consider.

An engineer usually makes several _____. He may also make several lists of materials. One or two of the designs might look as though they meet all the objectives of the system. If necessary, these designs can be tested in the _____ before a final decision is made.

When the engineer's final design and the list of materials have been approved, the schematic diagram can be made. The schematic is the diagram you will see and use. The design information from which it was drawn goes into the engineer's notebook, into the company files, or even into the wastebasket.

Once the most appropriate arrangement is chosen, the engineer then changes the words into _____, and perhaps adds a few words to make sure that the schematic is completely clear.

Using the Schematic

The most important function of a schematic to you as a maintenance technician is to help you _____ the system and to _____ it when it breaks down. In order to use a schematic effectively, you must thoroughly understand how to read it.

Every experienced maintenance specialist knows of certain systems that fail periodically. You must know and understand the system completely before you can analyze a recurring problem and find a solution. The _____ is your main source of information.

Sometimes engineering designs involve so many compromises that the results simply will not stand up in the plant. Or perhaps the equipment is being used for heavier service than it was designed to give. Before you blame the engineer or the circumstances, make sure that the difficulty is not your problem. Make sure you know how the system should work. If you understand what the operational problem is and how to fix it, and the system still keeps breaking down, then the basic difficulty is most likely in the system or in the way it is applied.

Understanding Symbols

Pictures and schematics. This course is intended chiefly to explain schematic symbols. But you will also see pictures and words in the drawings you use. For this reason, Lesson One explained that pictures would be covered as well as symbols.

There are at least three different ways of representing a Y pipe fitting. The first is a drawing that looks like a picture. These drawings are called _____. The second is a simpler, double-line drawing known as a _____. The third, a _____ symbol, is even simpler. To the maintenance specialist, they all mean the same thing—a 45° Y fitting.

What is the advantage of the schematic symbol if you are expected to recognize the picture and the double-line drawing with equal ease? The advantages are simplicity, economy, and the fact that engineers and maintenance workers the world over can recognize it. The schematic symbol is much _____ and _____ when compared to the other two drawings. Schematic symbols make it possible to show even a complex system on a small drawing.

Schematics show details. Anyone who knows how to read piping symbols does not need written descriptions below the symbols. The symbols alone provide all the information. It is difficult to show these differences with pictures or double-line drawings.

Sometimes schematic symbols include numbers. Numbers could be added to the picture or to the double-line drawing. But even with numbers, they would not be as useful, as easy to draw, or as clear as a schematic symbols.

Numbers in schematics are often used to tell the _____ _____ of the pipes. The word nominal comes from the Latin word nomen, meaning "name." Thus, the term nominal diameter means "name diameter." It is not the exact diameter, but it serves to distinguish one pipe size from another.

Symbols that look alike. Several symbols might look much alike yet represent different things. You will find there are many symbols that look alike but have different meanings. Here are three examples:

Example 1. The symbols drawn at the end of this paragraph represent two _____ _____, both remotely operated. But they are different. The difference is shown by the arrow in the center of each valve. One arrow points directly to the line leading out from the valve. The other angles downward. When the arrow points directly to the line, it means that the valve is normally _____. When it points downward, it means that the valve is normally _____. This may look like a small difference, but it is an important one.

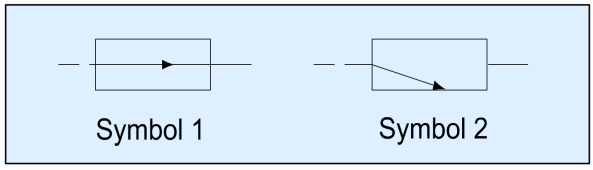

Example 2. Below are four different symbols for pipe lines. They are similar in appearance but different in what they represent. The first symbol means that the pipes are _____ at the intersection. The other three pairs of pipes pass by each other. They are not connected.

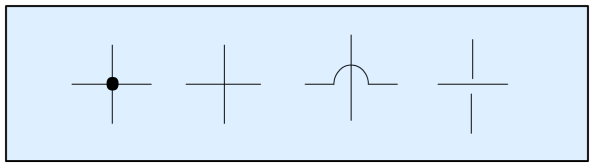

Example 3. Here are three different symbols for a tee fitting. The first is a _____ view. The second shows the outlet turned _____. The third shows the outlet turned _____.

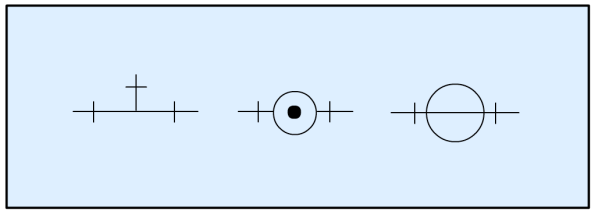

If you read schematics regularly, you will want to build your own collection of symbols and their meanings. Hundreds of symbols appear in schematics, but not all schematics include _____ to explain them. Keeping your own collection will help you identify the less common symbols.

Identifying Symbols and Connections

Tables of symbols that are standard in most industries appear in this lesson and the following ones. In following lessons, you will receive detailed information about the symbols used to represent electrical, fluid-power, and piping components. Recognizing these symbols requires that you match them with their meanings, using a _____ or (if the schematic has no _____) a table of symbols.

Once you have identified the individual symbols, you must analyze the schematic to see how the parts go together. You already know that various kinds of _____ have different meanings in different schematics. Now you must figure out what the lines mean in the schematic you are trying to read.

Reading Diagrams

Schematics present a great deal of information in a small amount of space. Many problems are created by failure to interpret them carefully.

If you follow the step-by-step approach described below, you will be on your way toward answering many of the questions that will arise on the job. You will also avoid many possible mistakes when you set out to repair a system. The steps are listed in the order you should follow.

1. Identify the system. The title might tell you it is a schematic of an electric circuit. Even if the title did not tell you, the _____ would.
2. Grasp the nature of the system. What kind of electric circuit is it? Again, the title tells you. But if it did not, the nature of the _____ would tell you.
3. Figure out how the system should work.
4. State the problem. Why are you reading this schematic? State the problem in your mind.
5. Think why there might be a problem.

6. Study each _____ of the schematic.
7. Examine the actual circuit. Once you understand the schematic, you can check each part against the actual system.

This method of reading the drawing and relating it to the actual system is an effective way to use a schematic. It takes a little time and patience, plus some thinking. But it will help you figure out what trouble you are looking for and what to do when you find it.

Summary

All schematics are composed of symbols and connecting lines. Well-prepared schematics show components arranged in sequence as they operate in the system. In a plant, it would be unusual to find the parts of a system arranged so neatly.

Different symbols portray similar parts in different kinds of systems—electrical, fluid power, and piping. The lines that connect these parts also differ. Tables of symbols and lines will help you identify the various possibilities.

A number of clues in schematic drawings make them easier to read. Some symbols look like the parts they represent. Others combine two or more familiar symbols to form a new symbol. Titles, legends, lists of components, numbers, words, and notes all help the maintenance specialist understand how a device or system should work. If you know how it should work, it becomes easier to figure out what might be wrong.

Many mistakes and false starts can be avoided by taking a step-by-step approach to troubleshooting. First make sure what kind of system you have. Figure out what it is designed to do and how it should work. Identify the problem—what went wrong—and what the causes might be. Find the part of the schematic that shows the troubled area, and study it in detail. Then you are ready to check out your ideas about what went wrong by examining the actual device. From the schematic, you can tell where to look for the problem.